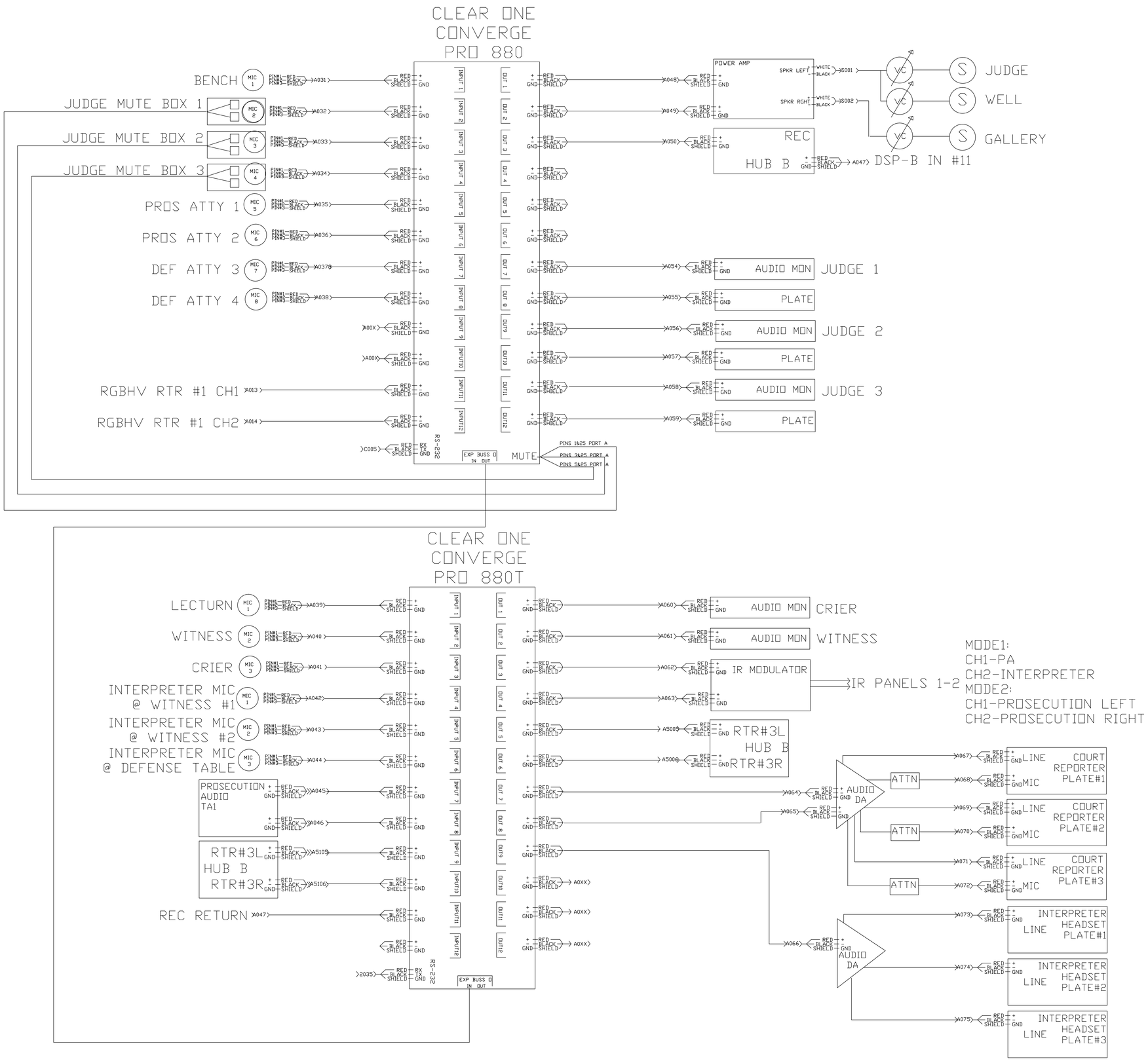

DESIGNED BY:	DATE:
DRAWN BY:	SCALE:
COMPUTER LOCATION	
APPROVED BY:	
DATE:	

Revisions

SYM	DESCRIPTION	DATE
△		
△		
△		
△		
△		
△		
△		

Submittals

ISSUED FOR:		DATE

A/V SYSTEM DESIGNED + ENGINEERED FOR:

JUDICIAL SYSTEM
MULTI PURPOSE

SHEET TITLE

MULTI PURPOSE 3002
AUDIO DWG

JOB No.	SHEET No.
XXXXX-XXXX	AV2.3
DATE 11-13-17	